BREAKS

Breaks are tubular electrical isolators which are composed of metal adapters brazed to both ends of a ceramic insulator. These assemblies are used primarily for voltage isolation. Assemblies with inner diameters less than 2.5 inches are typically referred to as breaks, and those with larger inner diameters are called envelopes.

MPF offers several mounting options for breaks and envelopes: Weldable, Quick Flange (QF), and Conflat Flange (CF). Custom adapters, plates, and flange configurations are available by request.

Cryogenic Breaks

Electrical breaks are often required in transmission lines for cryogenic fluid. Several standard designs are offered which are safe to operate to -200°C. These cryogenic breaks are intended to be TIG welded into cryogenic fluid transmission lines, and typical adapter designs are available with 1/8" to 3/8" diameters.

Liquid Breaks

Coolant fluid lines often require an electrical break. Installation of liquid breaks into a transmission line for coolant fluid requires soldering or low temperature brazing (below 700°C). Standard adapters fit 1/4" to 1/2" diameter tubes.

Vacuum Breaks & Envelopes

Various transitions in vacuum systems require voltage isolation. Breaks and Envelopes are all suitable for ultra high vacuum environments. Both are constructed using a high purity alumina insulator sealed into stainless or kovar sleeve adapters.

Vacuum Breaks are available with nominal tube diameters up to 3 inches, and voltage ratings up to 60,000 Volts DC. Standard designs include Weldable, Conflat Flange and Quick Flange adapters.

Vacuum Envelopes are available with nominal tube diameters up to 8 inches, and voltage ratings up to 20,000 Volts DC. Weldable and Conflat Flange adapters are standard.

Breaks

Section 6: Contents

Section	Type	Electrical Rating	Thermal Rating	Pages
6.1	**Cryogenic Breaks** Nominal Tube Diameter: 1/8 to 3/8 inches	Voltage: 5000 to 10,000 Volts DC	Break: -200 to 450°C	**180-181**
6.2	**Liquid Breaks** Nominal Tube Diameter: 1/4 to 1/2 inches	Voltage: 5000 Volts DC	Break: 0 to 250°C	**182**
6.3	**Vacuum Breaks** Nominal Tube Diameter: 3/4 to 3 inches	Voltage: 5000 to 60,000 Volts DC	Break: -200 to 450°C	**183-184**
6.4	**Vacuum Envelopes** Nominal Tube Diameter: 2-1/2 to 8 inches	Voltage: 10,000 to 20,000 Volts DC	Envelope: -200 to 450°C	**185**

Operating Conditions

The electrical and thermal ratings specified are safe operating limits determined by various factors including material properties, mechanical design, and the intended operating environment. All electrical ratings are based on operation with one side in dry atmosphere and the other side in vacuum of 1 x 10^{-4} Torr maximum pressure. Temperature ratings for various mounting options may reduce the operating range of an assembly. All assemblies have a maximum thermal gradient of 25°C per minute and may be damaged if this limit is exceeded.

1/8" Cryogenic Breaks 5000 Volts DC

Fig. 1

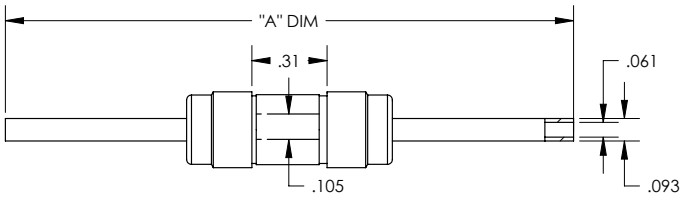

Fig. 2

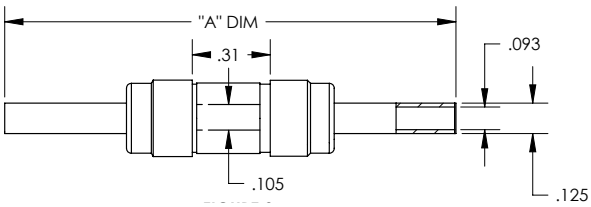

Fig. 3

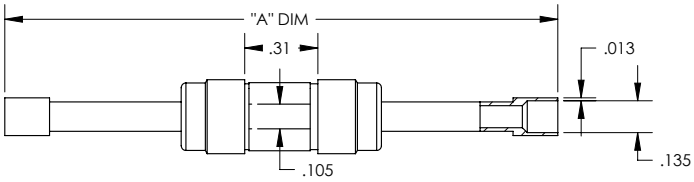

NOM.	FIG	"A" DIM	PART #	PRICE
3/32	1	2.30	A0574-2-W	45.00
1/8	2	1.80	A1886-1-W	45.00
1/8	2	2.30	A1886-2-W	45.00
1/8	2	1.84	A0578-1-W	53.00
1/8	3	2.34	A0578-2-W	53.00

1/4" & 3/8" Cryogenic Breaks 10,000 Volts DC

Fig. 1

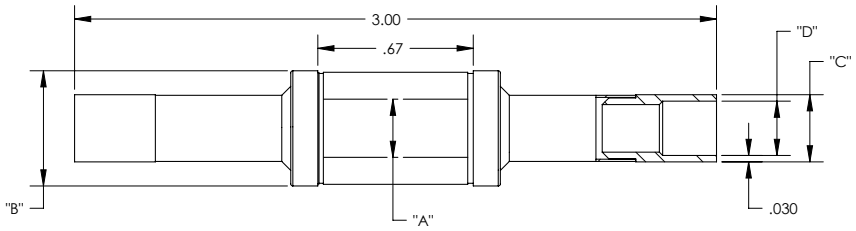

Fig. 2

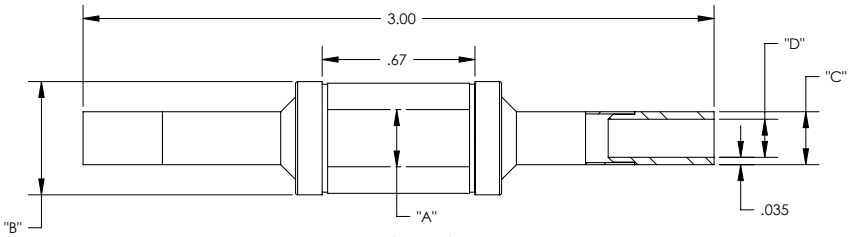

NOM.	FIG	A	B	C	D	PART #	PRICE
1/4	1	.27	.54	.31	.25	A0573-1-W	70.00
1/4	2	.27	.54	.25	.18	A0572-1-W	70.00
3/8	1	.43	.79	.44	.38	A0573-2-W	110.00
3/8	2	.43	.79	.38	.31	A0572-2-W	110.00

1/4", 3/8", & 1/2" Liquid Breaks 5000 Volts DC

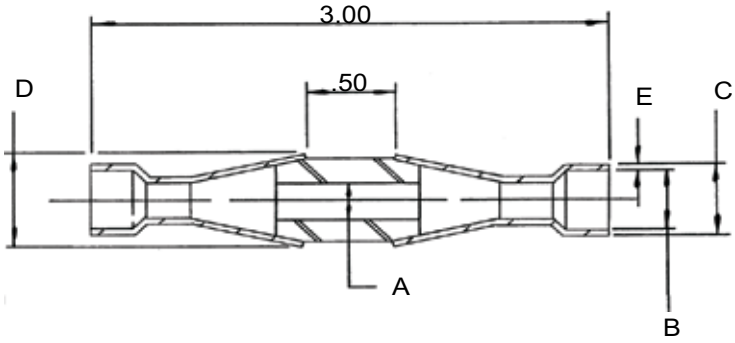

NOM.	MATERIAL	A	B	C	D	E	PART #	PRICE
1/4	COPPER	.21	.255	.32	.59	.035	A0579-2-W	125.00
3/8	COPPER	.25	.380	.44	.59	.035	A0579-1-W	130.00
1/2	COPPER	.41	.505	.59	.74	.040	A0580-1-W	145.00

3/4" to 1-1/2" Vacuum Breaks *to* 60,000 Volts DC

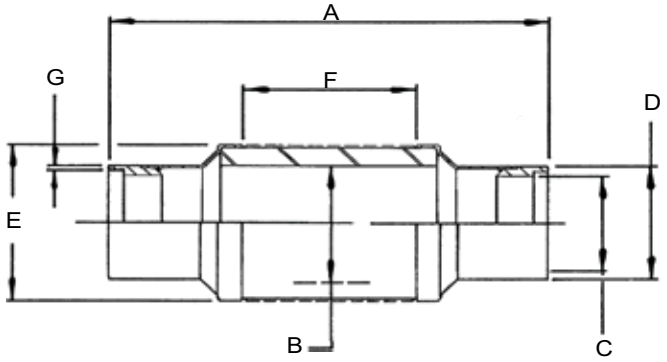

NOM.	VOLTS	A	B	C	D	E	F	G	PART #	PRICE
3/4	5KV	1.90	.75	.63	.75	1.00	.30	.035	A5266-1-W	150.00
3/4	15KV	2.60	.75	.63	.75	1.00	1.00	.035	A0584-1-W	150.00
3/4	30KV	4.60	.75	.63	.75	1.00	2.00	.035	A1743-1-W	235.00
1-1/2	5KV	2.20	1.25	1.37	1.50	1.66	.25	.065	A0594-1-W	130.00
1-1/2	30KV	3.80	1.25	1.37	1.50	1.66	2.00	.065	A0594-2-W	145.00
1-1/2	60KV	5.90	1.25	1.37	1.50	1.66	4.00	.065	A0594-3-W	290.00

3/4″ *to* 1-1/2″ Vacuum Breaks *to* 60,000 Volts DC
CONFLAT FLANGE

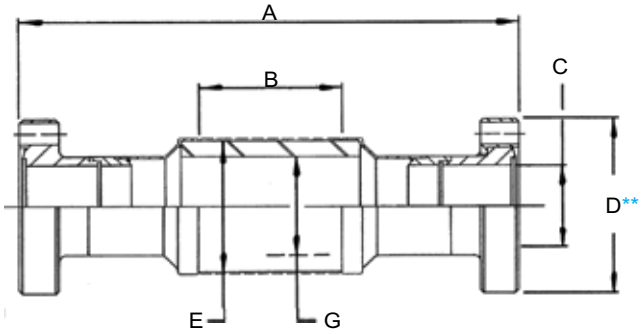

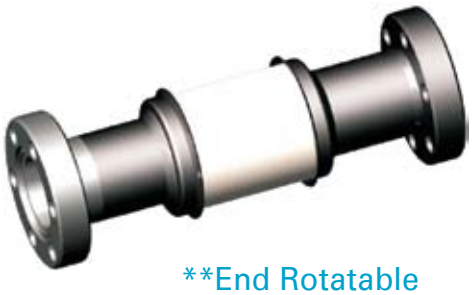

**End Rotatable

NOM.	VOLTS	A	B	C	D	E	G	PART #	PRICE
3/4	5KV	2.90	.30	.63	1.33	1.00	.75	A7535-1-CF	230.00
3/4	15KV	3.62	1.00	.63	1.33	1.00	.75	A0585-1-CF	230.00
3/4	30KV	4.60	2.00	.63	1.33	1.00	.75	A2596-1-CF	330.00
1-1/2	5KV	2.65	.25	1.37	2.75	1.66	1.25	A0595-1-CF	230.00
1-1/2	30KV	4.20	2.00	1.37	2.75	1.66	1.25	A0595-2-CF	245.00
1-1/2	60KV	6.30	4.00	1.37	2.75	1.66	1.25	A0595-3-CF	425.00

3/4″ *to* 1-1/2″ Vacuum Breaks *to* 60,000 Volts DC
QUICK FLANGE

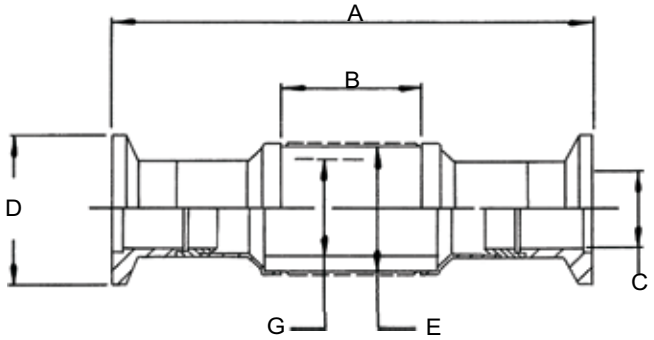

NOM.	VOLTS	A	B	C	D	E	G	PART #	PRICE
3/4	5KV	2.90	.30	.63	1.18	1.00	.75	A7823-1-QF	230.00
3/4	15KV	3.62	1.00	.63	1.18	1.00	.75	A0592-1-QF	230.00
3/4	30KV	4.60	2.00	.63	1.18	1.00	.75	A1744-1-QF	330.00
1-1/2	5KV	2.50	.25	1.37	2.16	1.66	1.25	A0597-1-QF	230.00
1-1/2	30KV	4.10	2.00	1.37	2.16	1.66	1.25	A0597-2-QF	245.00
1-1/2	60KV	6.20	4.00	1.37	2.16	1.66	1.25	A0597-5-QF	425.00

1/2″ *to* 3″ Vacuum Breaks *to* 40,000 Volts DC

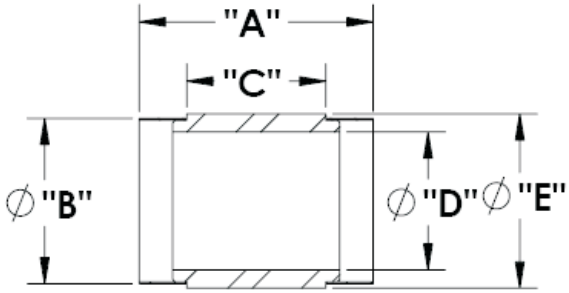

NOM.	VOLTS	A	B	C	D	E	PART #	PRICE
1/2	10KV	1.55	.508	.75	.31	.65	A1988-1-W	290.00
1-1/2	20KV	2.58	1.20	1.50	.90	1.40	A1988-2-W	330.00
2-1/2	30KV	3.36	2.375	2.00	2.00	2.50	A1988-3-W	390.00
3	40KV	4.36	2.80	3.00	2.40	3.00	A1988-4-W	430.00

1/2″ *to* 3″ Vacuum Breaks *to* 40,000 Volts DC
CONFLAT FLANGE

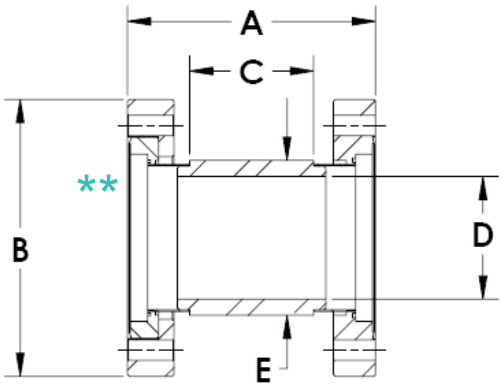

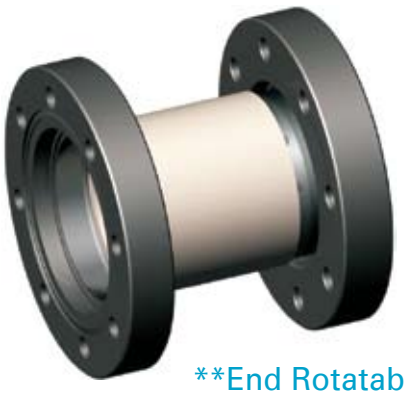

**End Rotatable

NOM.	VOLTS	A	B	C	D	E	PART #	PRICE
1/2	10KV	1.84	1.33	.75	.31	.65	A1991-1-CF	400.00
1-1/2	20KV	3.00	2.75	1.50	.90	1.40	A1991-2-CF	480.00
2-1/2	30KV	4.00	4.50	2.00	2.00	2.50	A1991-3-CF	690.00
3	40KV	4.80	6.00	3.00	2.40	3.00	A1991-4-CF	830.00

2-1/2″ *to* 8″ Vacuum Envelopes *to* 20,000 Volts DC

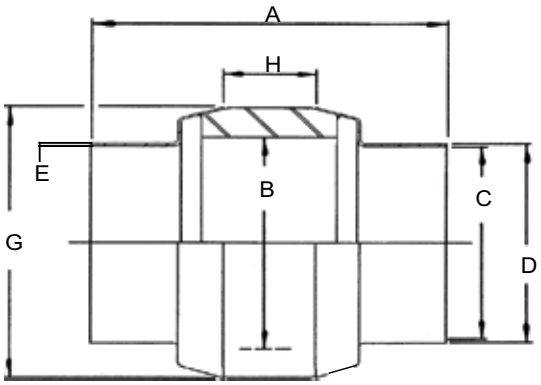

NOM.	VOLTS	A	B	C	D	E	G	H	PART #	PRICE
2-1/2	10KV	3.63	2.50	2.31	2.37	.03	3.23	.75	A0625-1-W	550.00
4	10KV	3.57	3.50	3.75	3.81	.03	4.25	.75	A0625-2-W	725.00
6	20KV	4.50	6.00	6.00	6.08	.04	6.92	1.50	A0625-3-W	1350.00
8	20KV	4.64	7.75	7.75	7.83	.04	8.80	1.50	A0625-4-W	1900.00

2-1/2″ *to* 8″ Vacuum Envelopes *to* 20,000 Volts DC
CONFLAT FLANGE

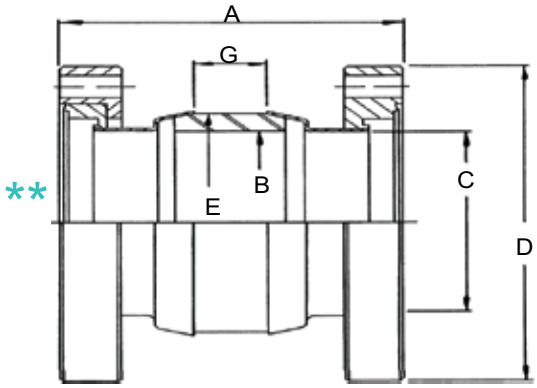

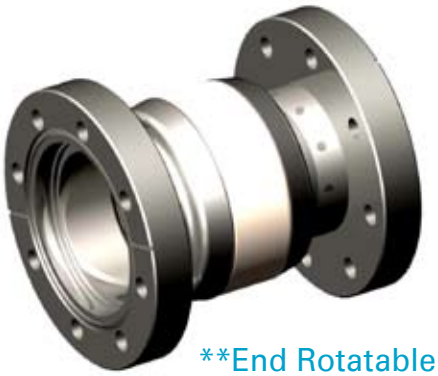

**End Rotatable

NOM.	VOLTS	A	B	C	D	E	G	PART #	PRICE
2-1/2	10KV	4.50	2.50	2.31	4.00	3.23	.75	A0805-1-CF	925.00
4	10KV	4.62	3.50	3.75	6.00	4.25	.75	A0805-2-CF	1150.00
6	20KV	5.50	6.00	6.00	8.00	6.92	1.50	A0805-3-CF	1975.00
8	20KV	5.75	7.75	7.75	10.00	8.80	1.50	A0805-4-CF	3000.00